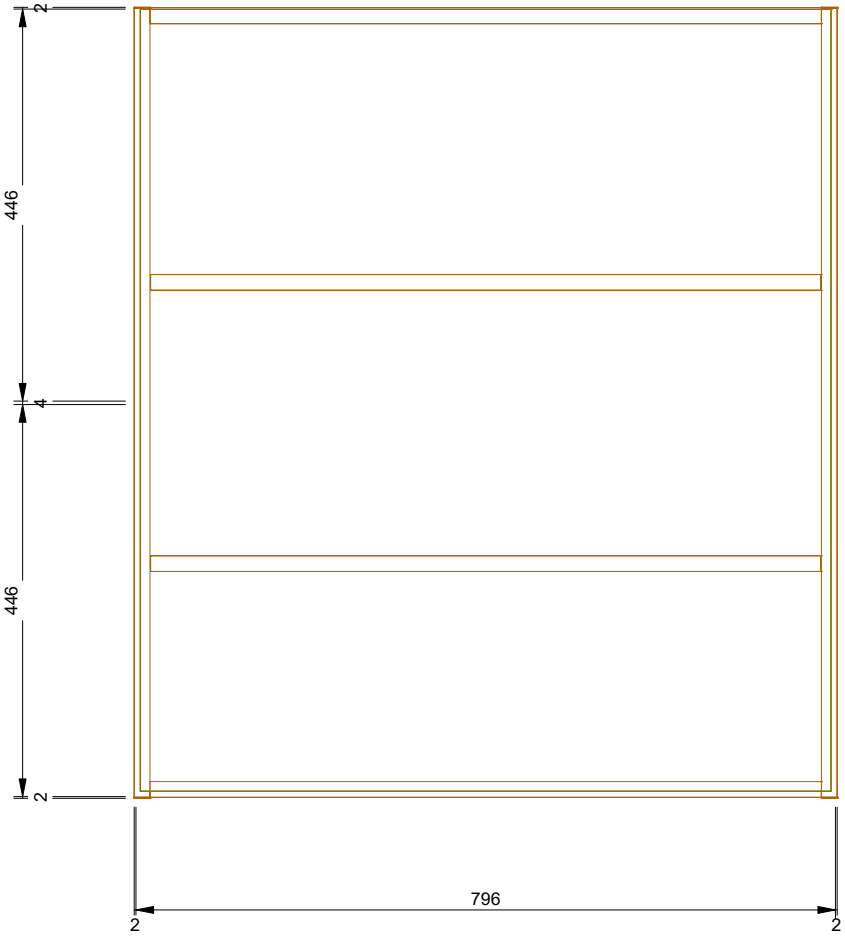

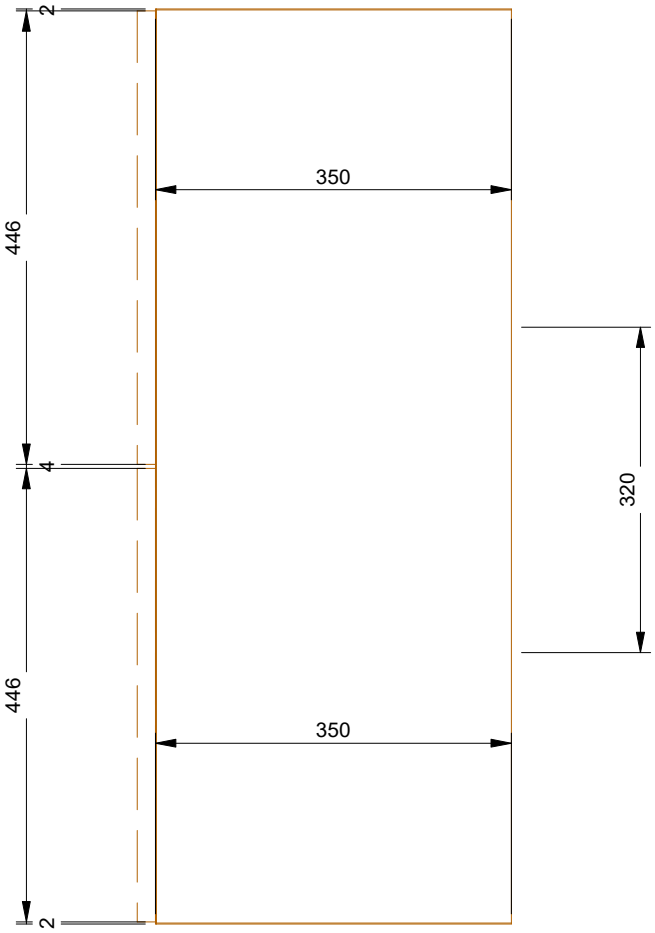

H80V90HF

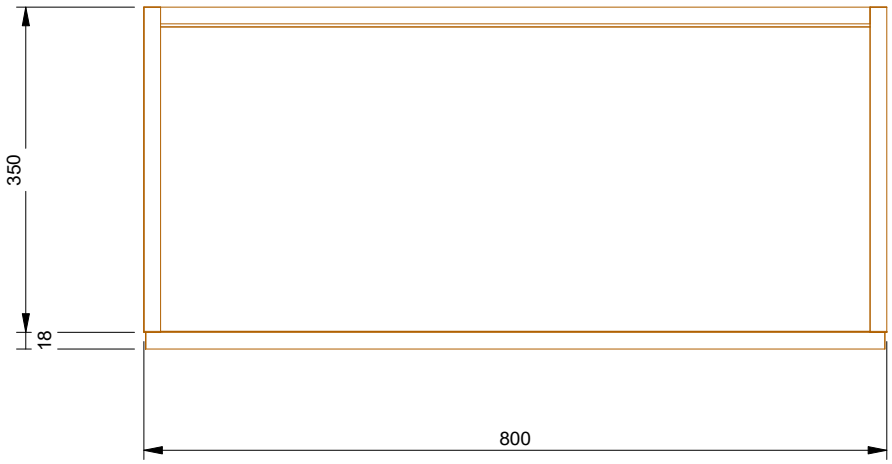

H80V90HF

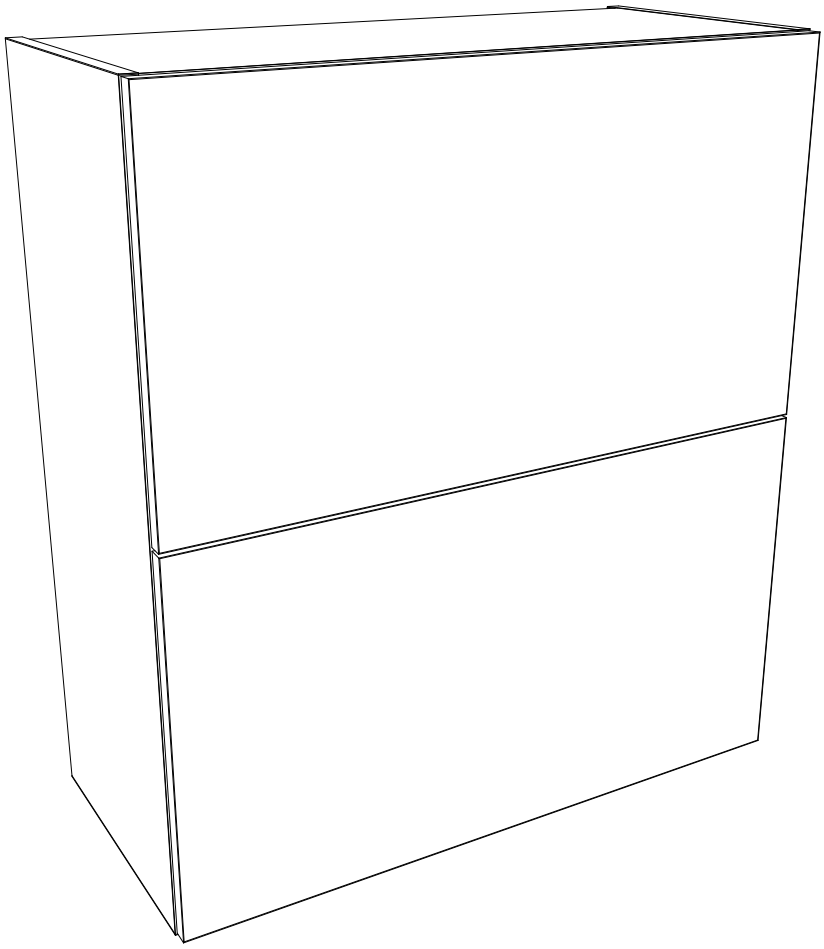

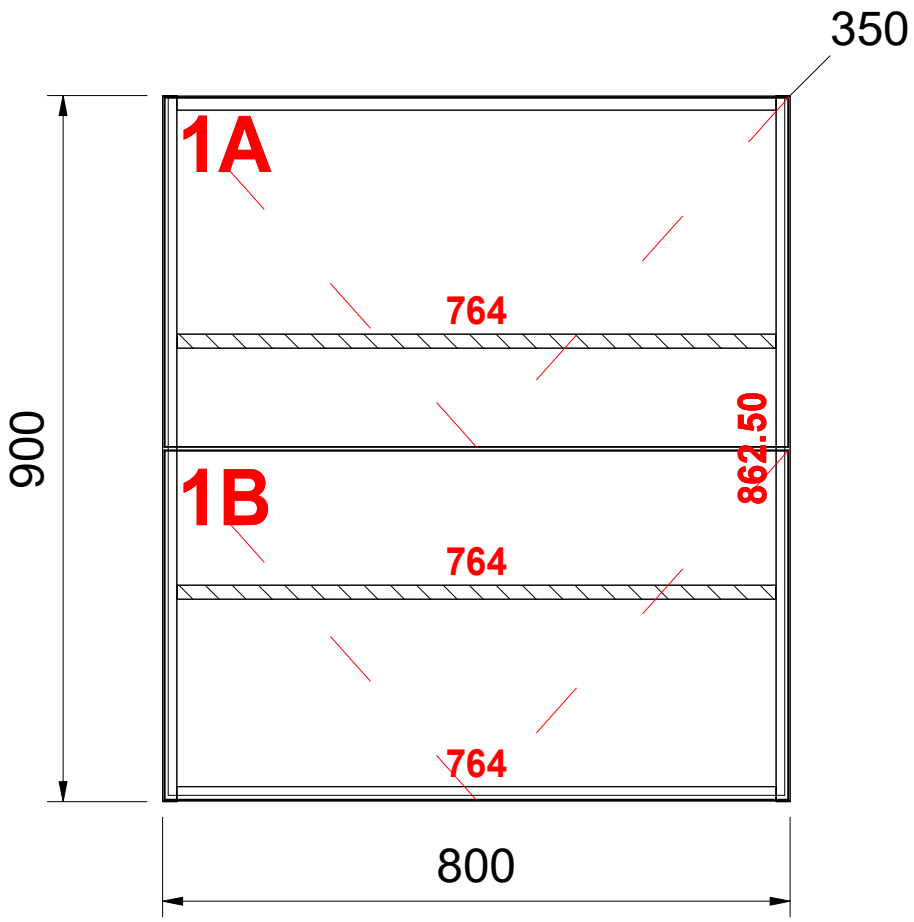

H80V90HF