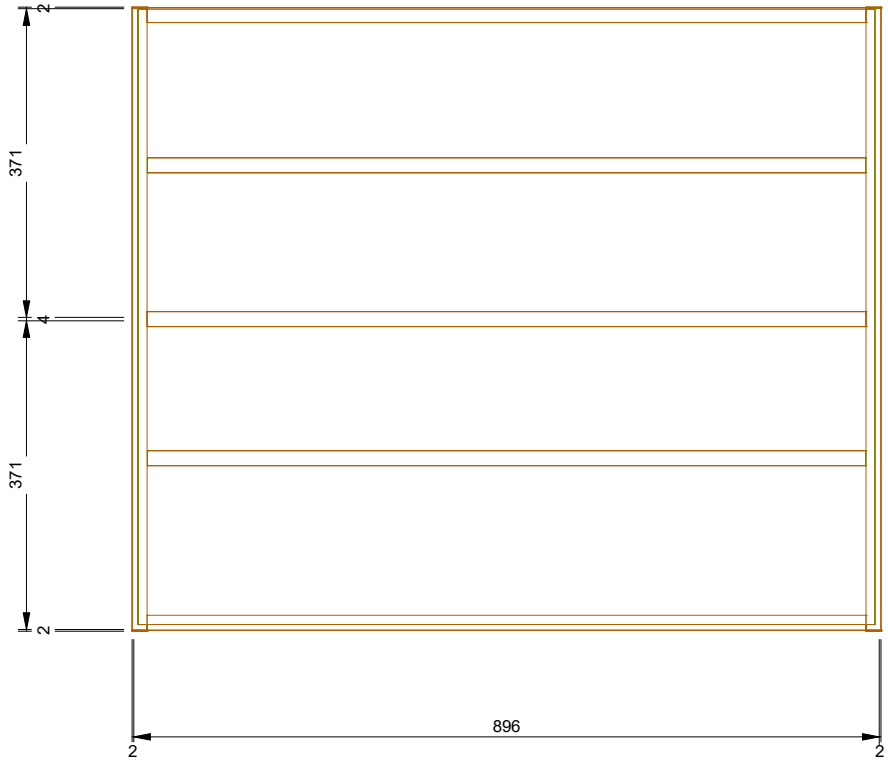

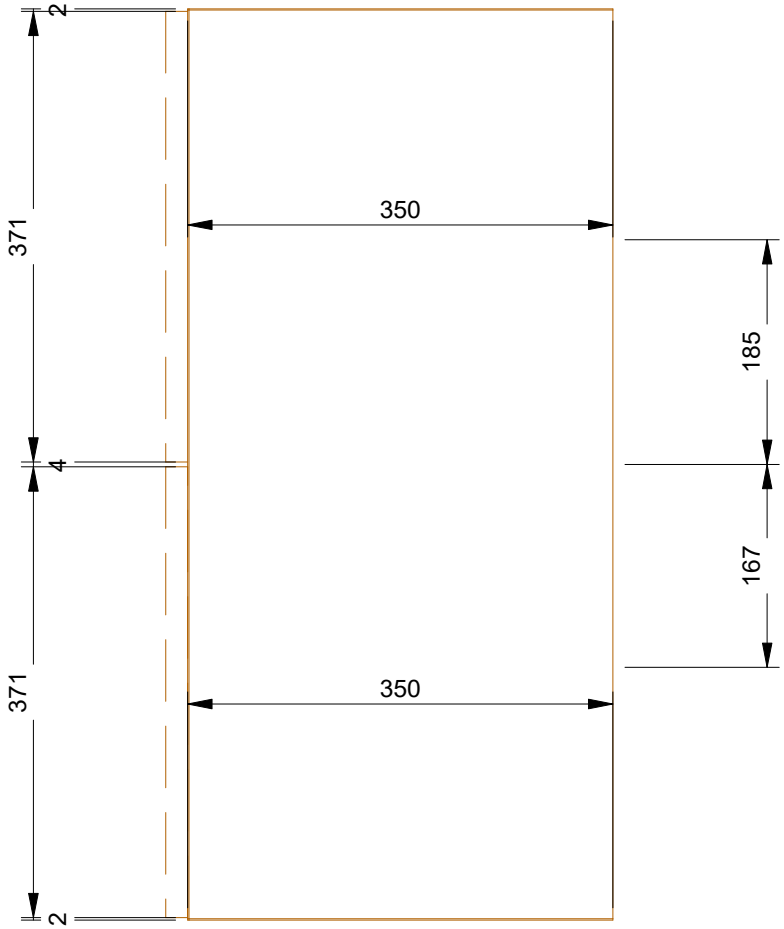

H90V75HKTop2

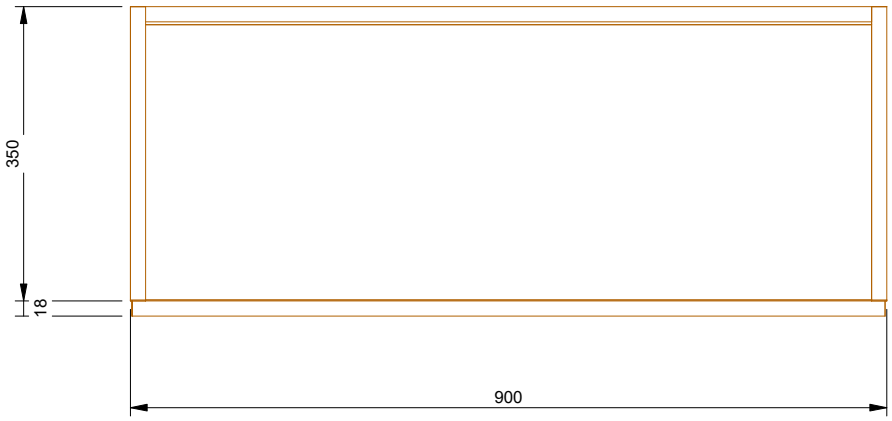

H90V75HKTop2

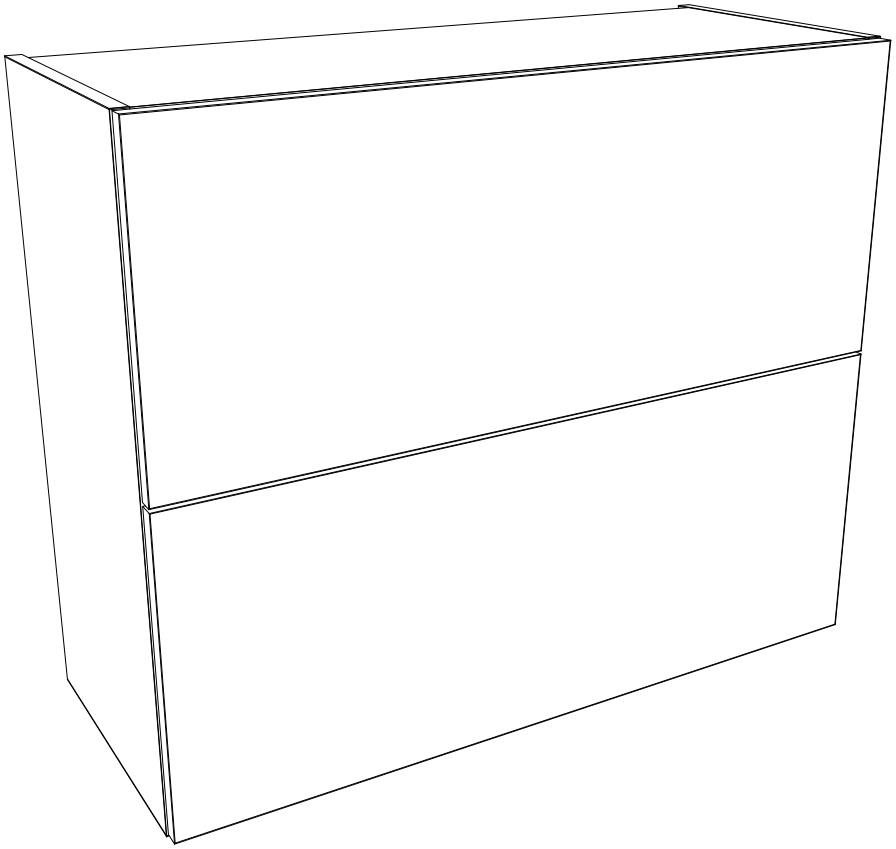

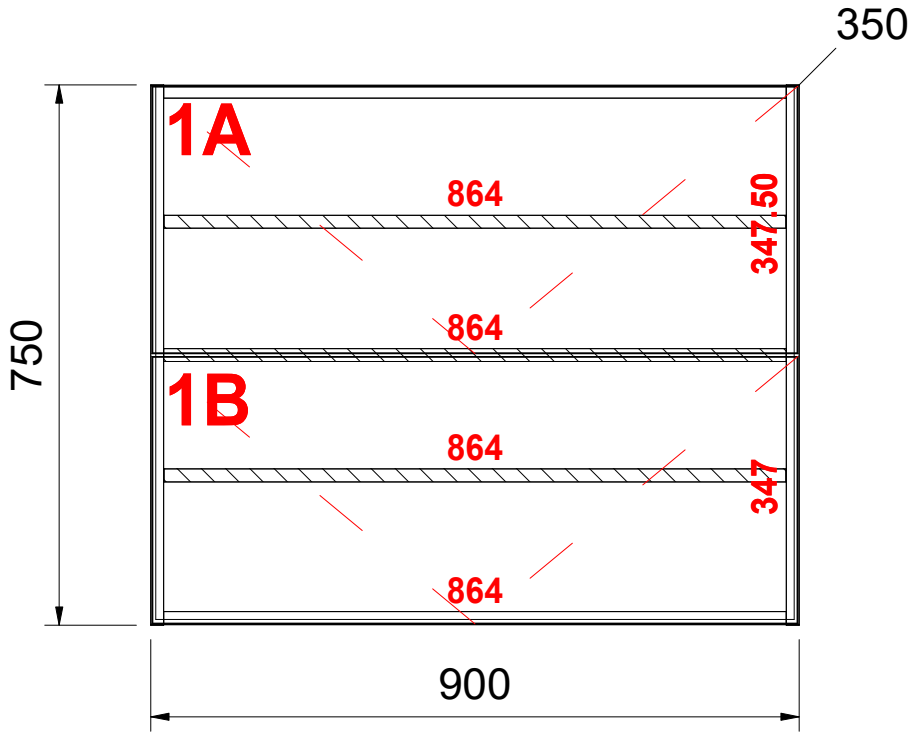

H90V75HKTop2