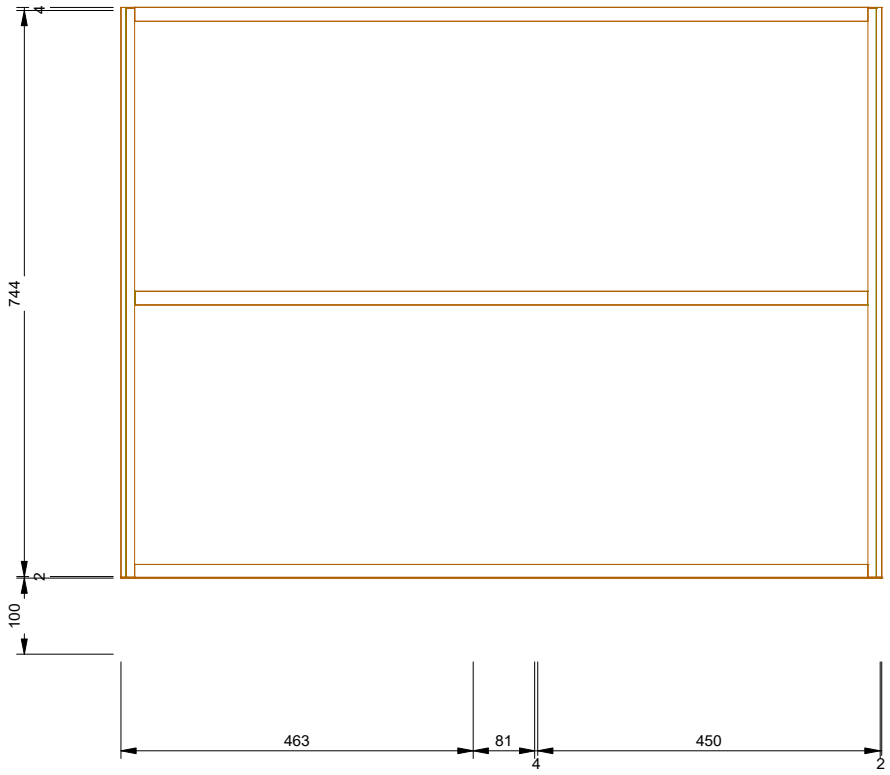

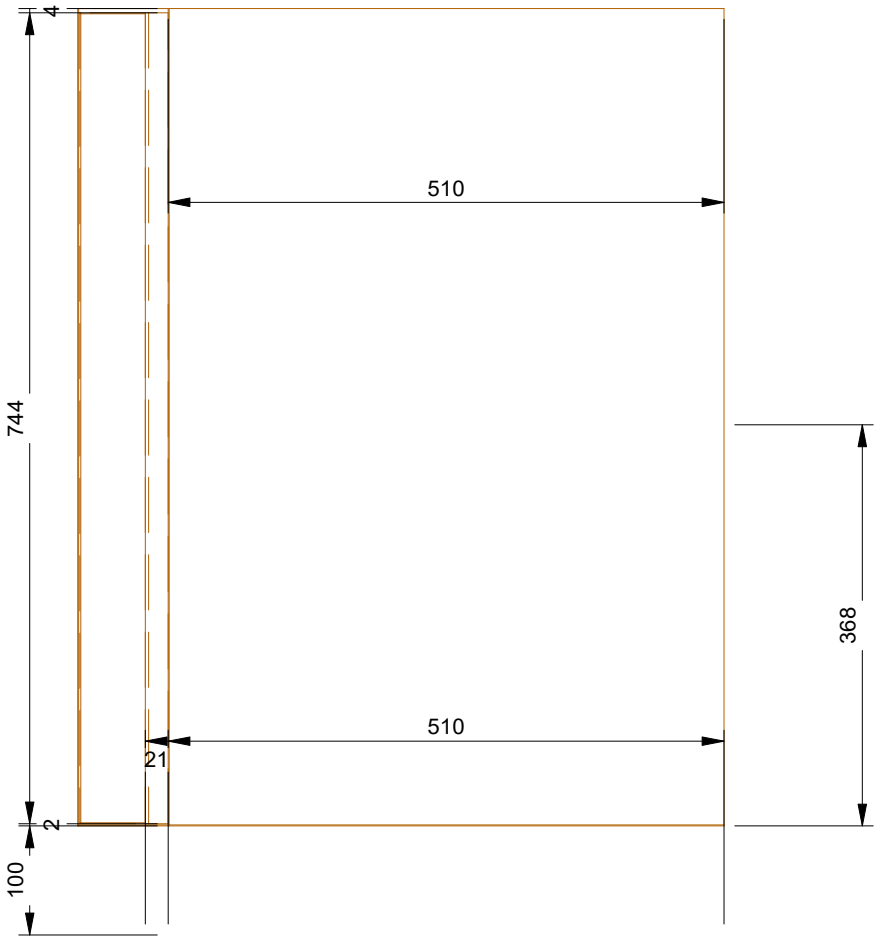

SR100P

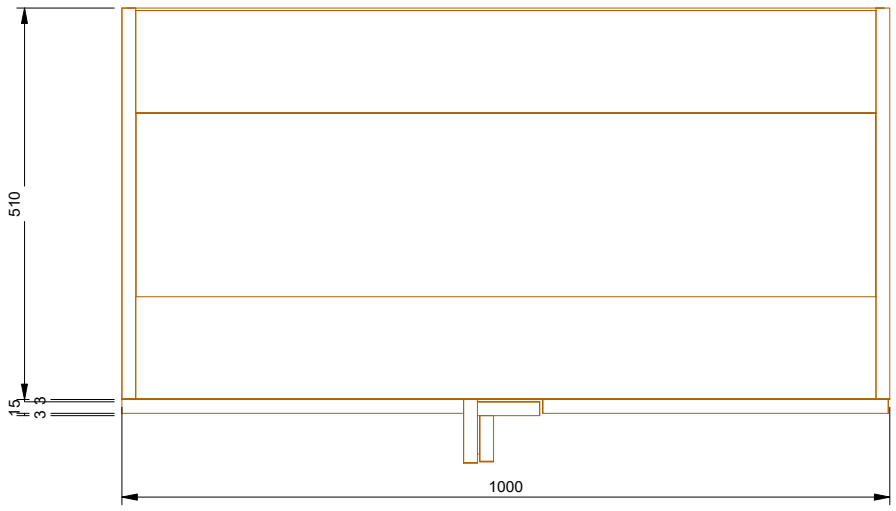

SR100P

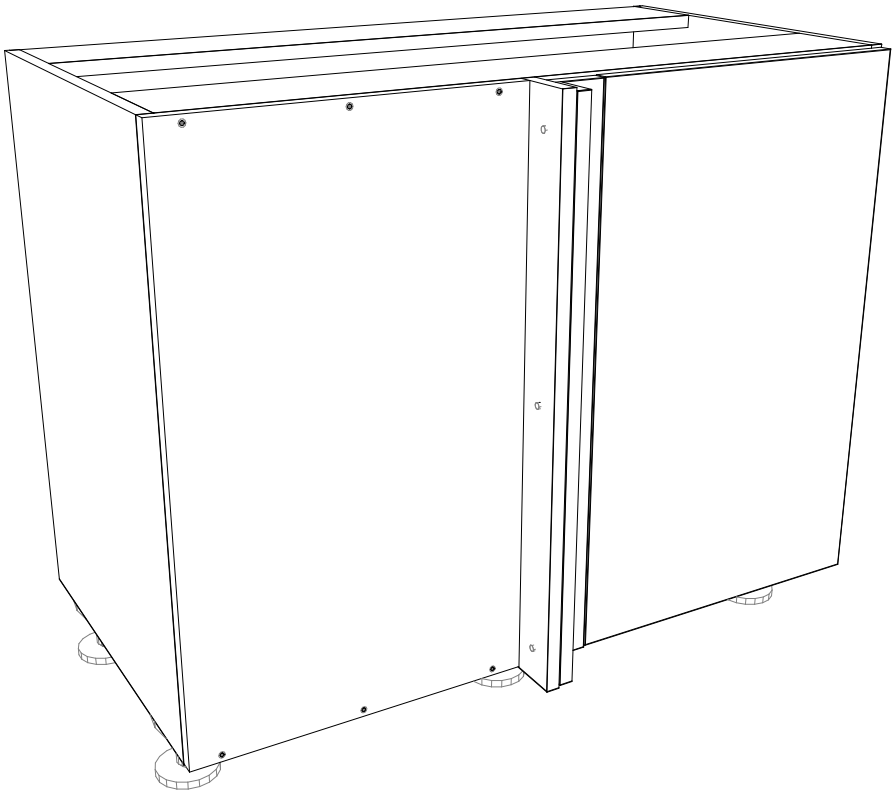

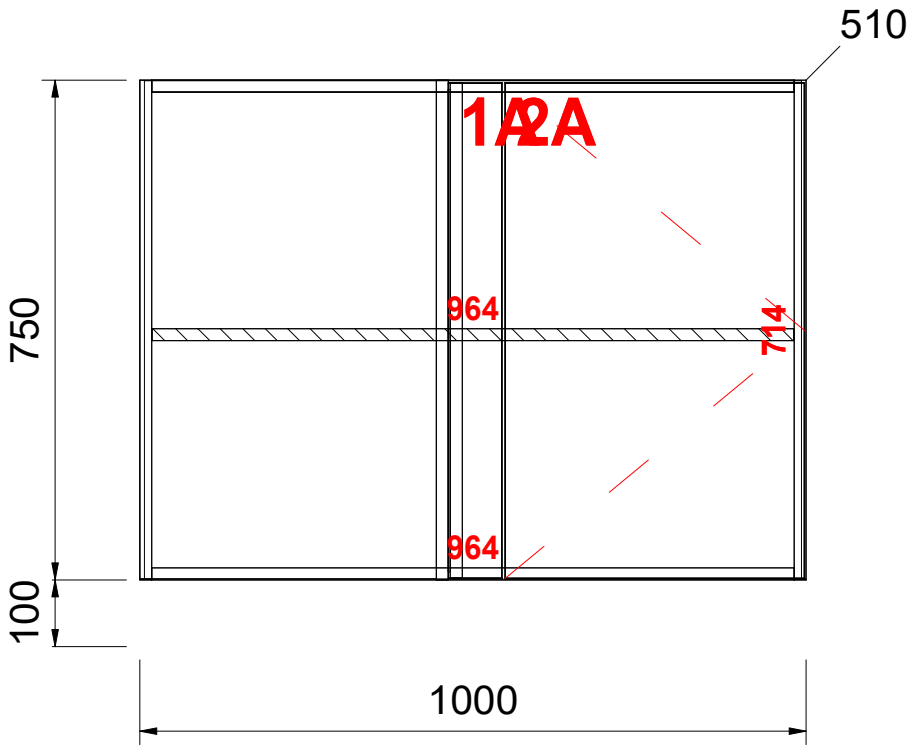

SR100P